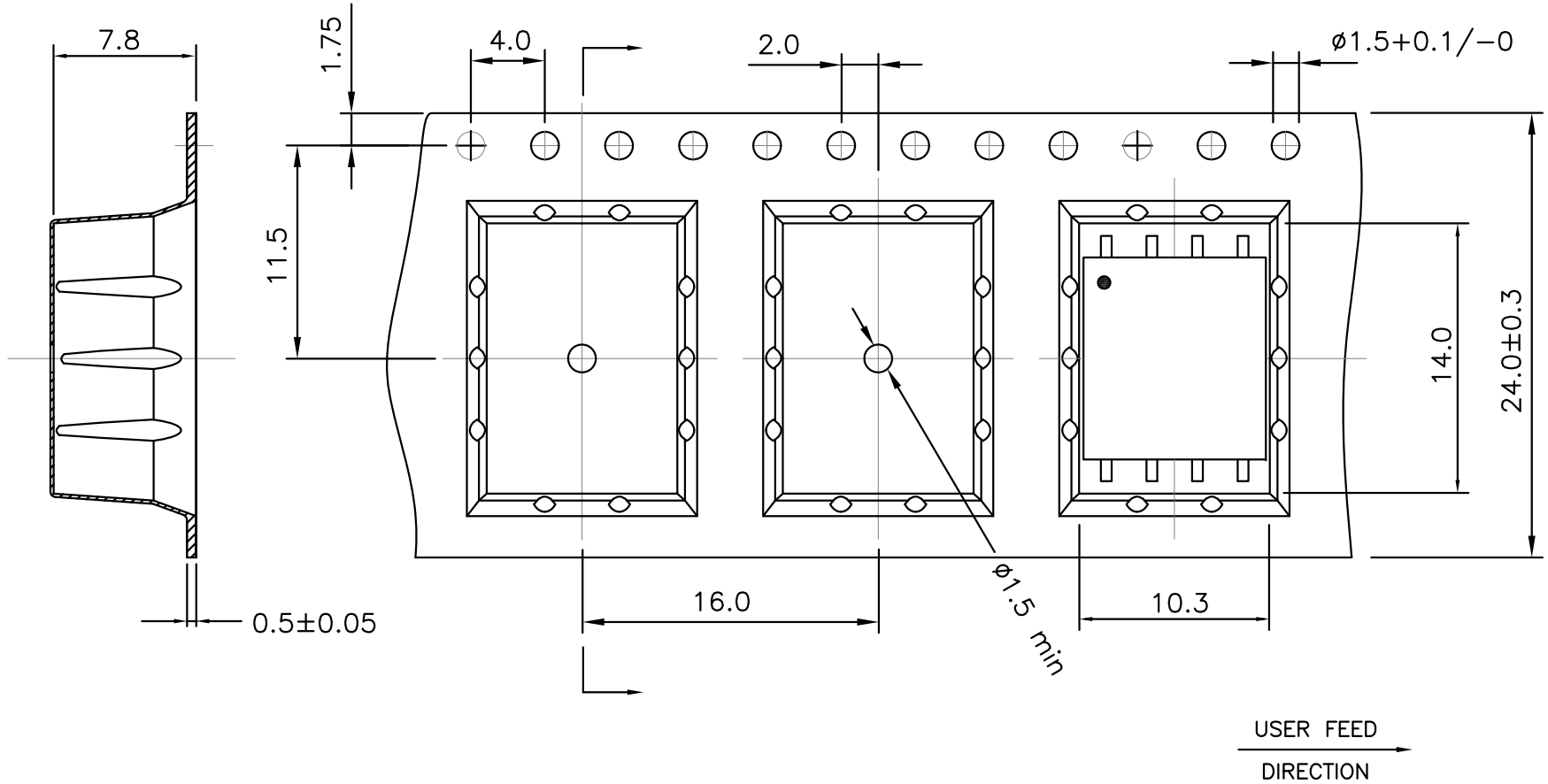

Dimensions are in mm
Tolerances ±0.10mm unless specified.
500 pcs per 330mm reel

HALO/PBL	TITLE	CARRIER TAPE		SIGNATURES		DATE	REV.	DESC.	DATE
	FOR	VS8 (16mm PITCH)		DRAWN	LI ZHI ZHONG	9/17/20	A	FIRST RELEASE	9/17/20
	PART NO.	89−CARR−VS8−24−16		CHECKED	VINCE ZHANG	9/17/20			
CALIFORNIA, USA KOWLOON, HONG KONG SINGAPORE				APPROVED	PETER LU	9/17/20			
	SCALE	NONE	PAGE 1 OF 1	FILE	CARR24VS8.DWG				